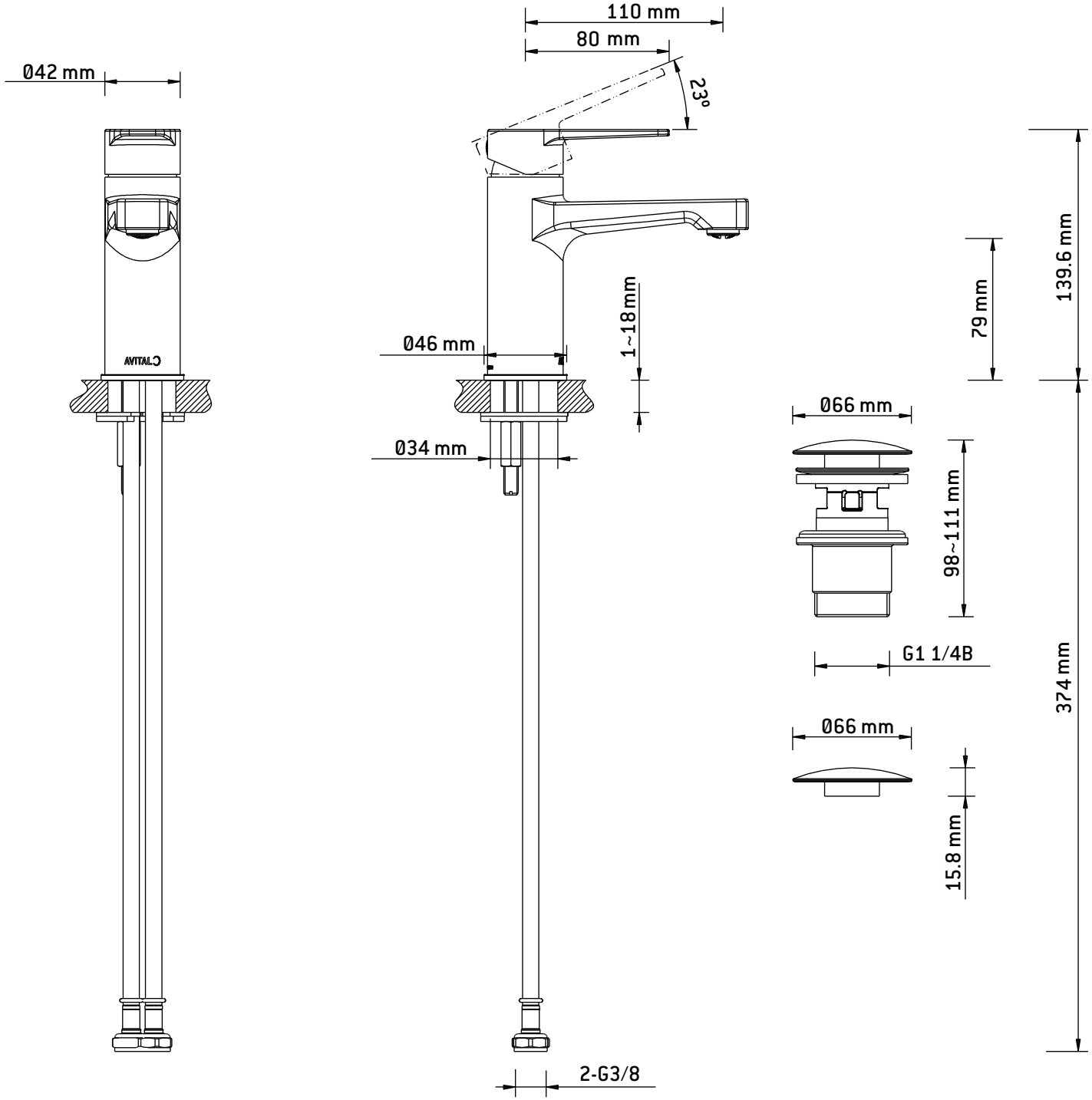
110 mm
80 mm
23°
Ø42 mm
Ø46 mm
1~18mm
Ø34 mm
79 mm
139.6 mm
Ø66 mm
98~111 mm
G1 1/4B
374 mm
Ø66 mm
15.8 mm
2-G3/8